Electric Salamander

AT-936
AT-937
AT-938

User's Manual

Dear Client & User,

Thank you for choosing our products. All the information and instructions in this manual take into account standard safety regulations, current levels of technical engineering as well as the expertise and experience we have developed over the years.

If the delivery consists of a special model, the actual scope of delivery may differ from the descriptions and illustrations in this manual. This is also the case for special orders or when the device has been modified in line with new technology. Should you have any questions, please contact the manufacturer.

For safety purpose and efficient operation, please read the manual carefully before any operation to the appliance, especially when starting up the device. Install the machine in accordance with this manual and the local related rules.

Notice: Read the instruction manual carefully before using the device. The manufacturer does not accept liability for any damage or malfunction resulting from not following the instructions for use.

The instruction manual should be kept near the device, easily accessible for anyone wishing to work with or using it. We reserve the right to make technical changes for purposes of developing and improving the useful properties.

Warning

- Any self-modification, wrong installation, adjustment or maintenance can lead to property loss or casualty. Please contact the manufacturer for any adjustment or maintenance, and have the work done by a trained & qualified personnel.
- For your safety sake, please keep the machine away from any flammable or explosive liquid, gas and other object.
- The device is not intended for use by individuals (including children) with physical or mental disabilities, insufficient experience, and/or insufficient knowledge unless such persons are under the supervision of a person responsible for their safety or have received instructions regarding appropriate use of the device.
- Keep children away from the device.
- Preserve this manual safely. When passing on/selling the device to a third party, the manuals must be handed over along with the device. All users must operate the device complying with the user's manual and related safety guidelines.
- Do not store or use any flammable or explosive liquid, gas and other objects near the device.
- If this appliance is placed near walls, partitions or kitchen furniture and the like, it is advisable to make these facilities with non-combustible material, otherwise cover them with non-combustible heat-resistant material, and pay attention to fire prevention regulations.
- Do not use any power supply other than indicated on the product.
- Do not employ any air switches or leakage switches which do not comply with safety standard.

Contents

1. Functional Introduction.....4
2. Structure Diagram & Working Principle.....4
3. Basic Features & Parameters.....6
4. Precautions & Recommendations.....7
5. Using Instructions.....8
6. Routine Check.....9
7. Cleaning & Maintenance.....9
8. Failure Analysis &Trouble Shooting.....10

1. Functional Introduction

These products of AT-936,937,938 are designed under our research & development while absorbing the advantages of similar products at home and abroad. They are integrated with all the merits of attractive design, reasonable structure, convenient operation, all stainless steel made, sturdy and durable, and easy cleaning, as well as temperature adjustable according to the food requirements within certain range. They can be used either individually or in combination with other furnaces. All of their features make them the ideal and necessary equipments for hotels, supermarkets, western restaurants, fast food restaurants and the like.

2. Structure Diagram & Working Principle

2.1 Structure Diagram:

AT-936

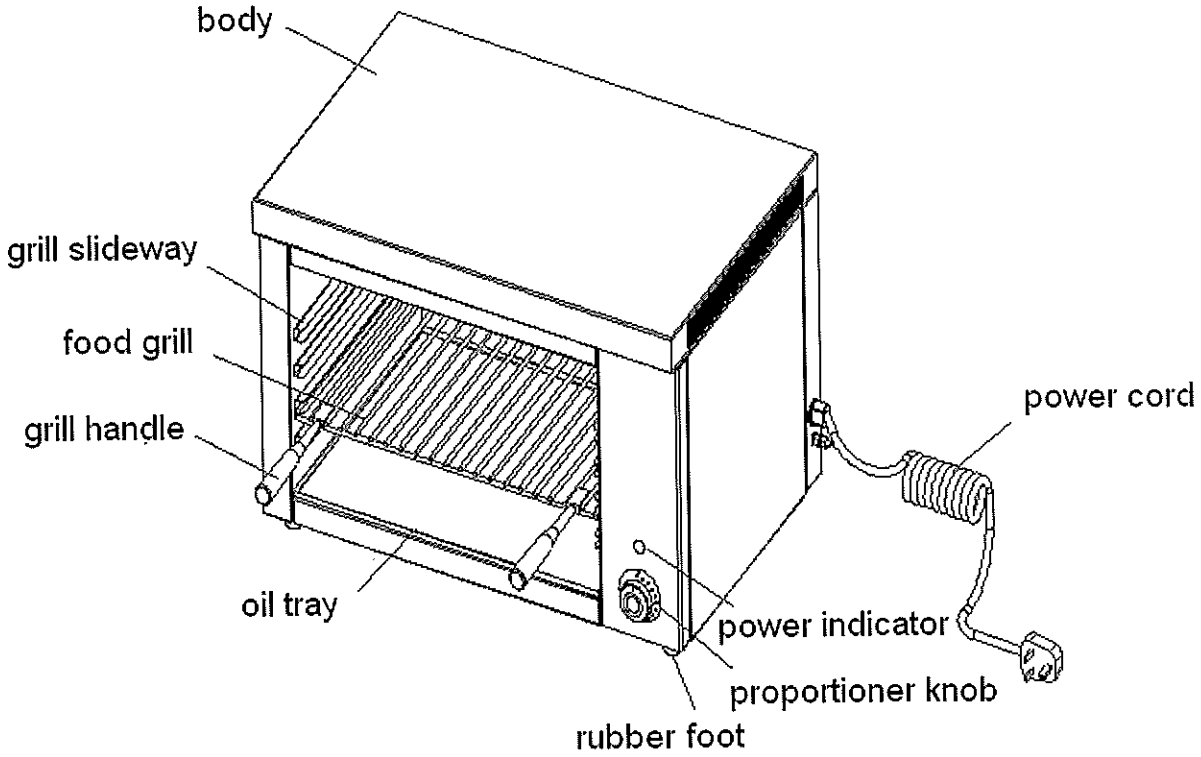

AT-937/938

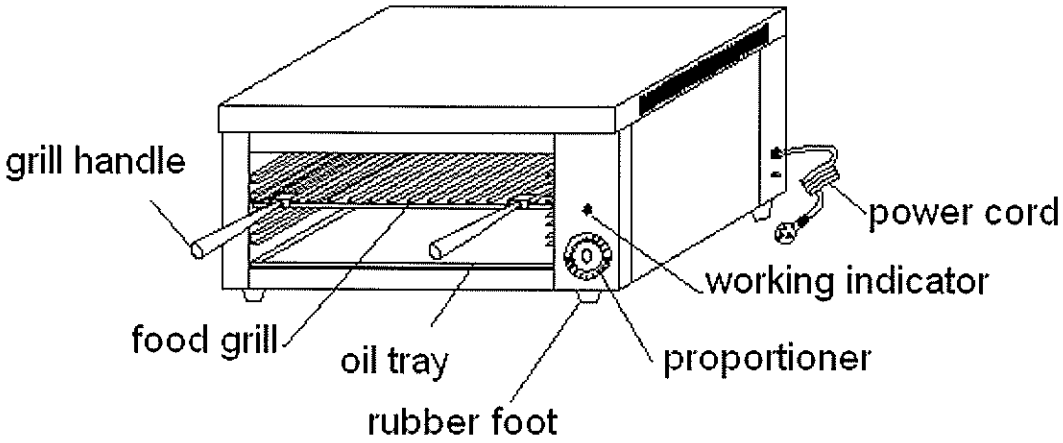

2.2 Structural Performance Features:

1. It is made of stainless steel, with adjustable multilayer and individual temperature control.
2. It can be employed for drying or baking all the fresh and refrigerant bread and flour made products.
3. It can also be employed for drying or baking all the fresh and refrigerant meat.

2.3 Electric Diagram:

AT-936/938 Salamander

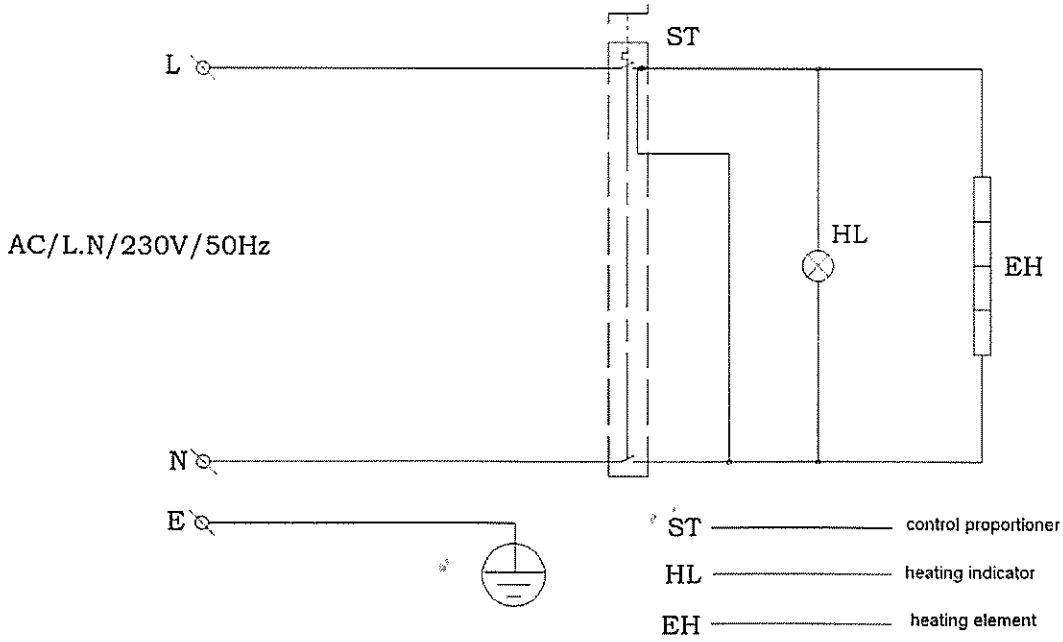

Salamander AT-937 4kW

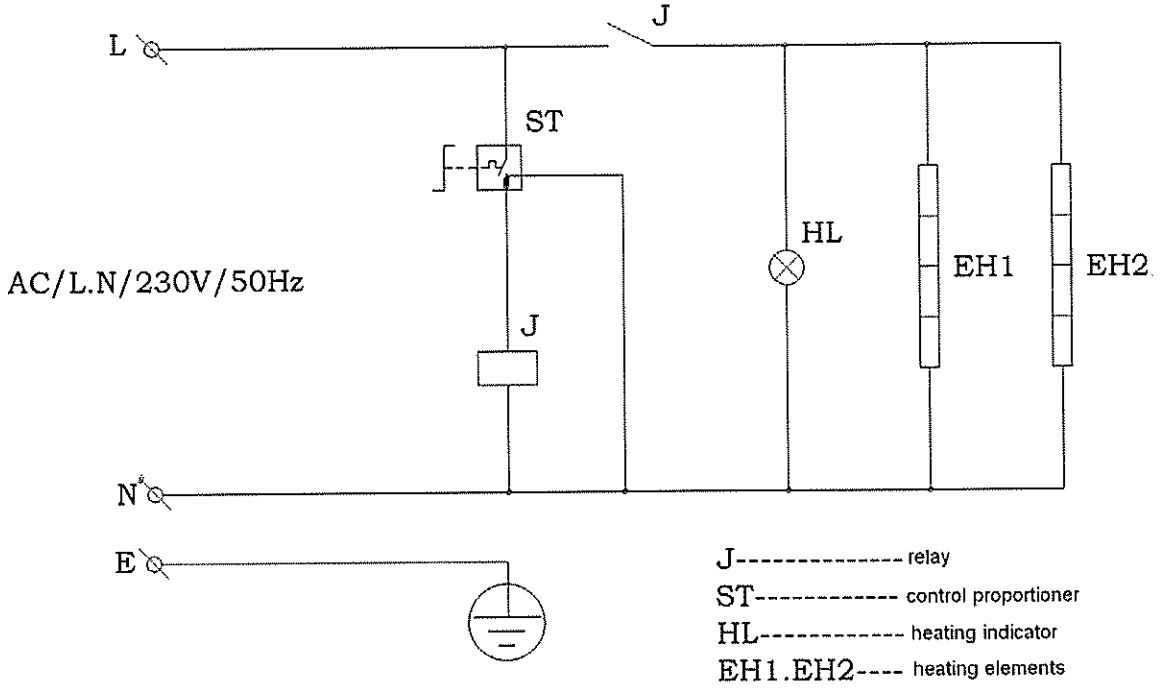

3. Basic Features & Parameters

Model	AT-936	AT-937	AT-938
Name	Electric Salamander (wall type)	Electric Salamander (counter top)	Electric Salamander (counter top)
Size（mm）	610×340×280	800×450×470	580×390×390
Power（kW）	2	4	2.2
Voltage（V）	220-240	220-240	220-240
Net（kg）	17	28	18

4. Precautions & Recommendations

4.1 Transportation and Storage:

During transportation, please handle the appliance carefully and no upside down to prevent the damage of the enclosure and inner parts. The packaged device should be stored in a well-ventilated warehouse of no corrosive gas. Should any temporally storage needed, please take measurement against raining.

4.2 Notice for Installment:

1. The supply voltage should be in accordance with the working voltage of the device.
2. The device is equipped with grounding bolt at the back. It shall be reliably connected to ground wire that comply with the safety regulations with copper wire no less than 1.5mm^2.
3. After installation, check the tightness of all the connection, the correct functioning of the voltage and the reliability of the ground wire.
4. Set the device on a flat, secure surface, and make the sides away from non-combustible material (eg. Brick walls or windows) no less than 10 cm, and the rear at least 20 cm.
5. According to the wiring regulation, the fixed wiring connected to this appliance must be equipped with an all-pole disconnect switch (leakage switch), with at least 3mm contact opening distance of each pole of the switch. It is also advised to install grounded leakage protection switch. Do not pile sundries in front of the switch for convenient operation.
6. Do not store any inflammable or explosive substances near the device. The ambient temperature shall be 0℃-35℃ and the relative humidity shall be lower than 85%.
7. All the installation of this device should be done by professional and qualified personnel.

Note: The ground wire shall be connected reliably. The plug and wiring board shall be in tight contact. Otherwise, the joints may heat up and blow the power cord due to improper connection, and then cause fire.

4.3 Special note

1. The appliance is a commercial machine which is not applicable for home use and should be operated by professional personnel.
2. This salamander is only intended for baking food or drying flour, other applications are not applicable.
3. No shaking or tilting during using.

4. Do not dismantle or modify the device, serious accidents may happen when dismantling or modifying.
5. Do not open the appliance enclosure. The appliance contains high pressure electric circuit, electric shock may occur when dismantling the frame.
6. Unscrew the plug and cut off the power when cleaning.
7. Do not spray water directly to the product when cleaning. Water can conduct electricity, thus electric leakage may cause electric shock.
8. Do not pat the product and put heavy object onto the product.
9. Abnormal operation may cause damage and danger.
10. High temperature may cause scald.
11. Do not touch the appliance directly with hand due to high temperature during or after the operation.
12. When the thunderstorm is coming, cut off the power supply asap to avoid damage done by the lighting stroke
13. Do not destroy the control panel with hard or sharp objects.
14. After working, disconnect it from power.
15. All the servicing work would be dangerous for people other than qualified personnel.
16. If the supply cord is damaged, to avoid danger, the substitution work should be done by the manufacturer, its maintenance department or similar professional personnel.

5. Using Instructions

1. Check all the parameters and installation before using. Only use it when everything's correct.
2. When cooking, please wear athermic gloves. To avoid burnings, do not touch the device enclosure.
3. When the device is powered on, if the proportioner knob is in a position shown in figure <1>, the heating indicator is off and the elements are not working. Rotate the knob, the indicator will be on and the device is working with the power.
4. Turn the knob clockwise just like shown in figure <2>, the heating elements start to work in a way of intermittent operation and the working power will increase as the rotation angle increases. When the temperature reaches the desired value, the elements will stop working (the indicator turns off at the same time); when the chamber temperature drops, the device will heat up automatically (while the indicator turns on again); the device works in such a circulation to keep the chamber temperature at a constant set temperature. And when the knob is in the position of figure <3>, the heating elements work continuously without interruption. Continue to rotate the knob clockwise to "OFF" position, the device stops working. If rotate the knob anticlockwise, the device will work conversely.

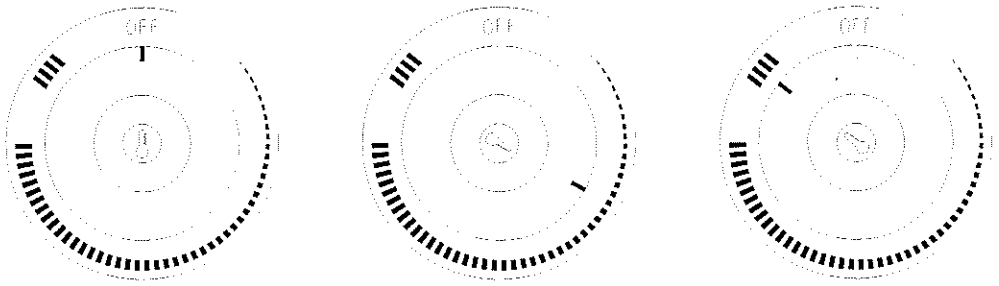

5. At the end of the operation, turn the knob to the position of figure <1> and de-energize the heating elements, pull out the plug and cut off the power supply.
6. This device is provided with two accessories: a food grill and a food tray. When using, regulate the relative position of the tray and grill according to the size of the foodstuff. The baked food in such a way will be satisfied.
7. When stop using it, rotate the proportioner anticlockwise to the off position to turn off the switch, and then unscrew the plug and cut off the power supply.

6. Routine Check

It is necessary to check the machine daily.

Check the machine regularly can avoid serious accident happens.

Stop using if user feels that there are some problems in the circuit or machine.

Check the appliance every time before and after using:

Before using: Whether the machine is tilted?
Whether the control panel is damaged?
Whether the power cord is aged, broken or damaged?

During using: Whether there is strange smell, odour or vibration noise?
Whether the temperature is out of control or there's leakage?
Whether the power is normal?

7. Cleaning & Maintenance

1. Do not clean the device when power on.
2. Disconnect power supply before any cleaning and maintenance to avoid electric shock.
3. Clean it when it's cool down completely. And do not use detergent with acid.
4. After working every day, wipe the furnace body and power cord with wet cloth and detergent which contains no corrosive substance. Do not flush it directly with

spray water to prevent water penetrating into the body to destroy its electric performance and cause electric shock.

5. Clean the chamber regularly. When cleaning, take out the food grill and oil tray and rinse them in water without cleanser and then clean the chamber with wet cloth and dry it with a soft cloth.
6. It is suggested to test or inspect the device once a month by a professional technician.
7. Turn off the thermostat and the power switch whenever stop using the device.
8. If not going to use the appliance for a long time, please clean it completely and store it in a well-ventilated warehouse with no corrosive gas.

8. Failure Analysis & Trouble Shooting

Symptoms	Causes	Solutions
No power in the device when switching on the switch	1. Fuses burnout 2. Power cord is unstuck	1. Replace for proper fuses 2. Tighten the power cord
Indicator is on but the chamber temperature rise is out of control	1. proportioner defective	1. replace the proportioner
Indicator is off while the furnace heats up normally	1. the indicator connection is bad 2. indicator defective	1. tighten the connection wire 2. replace the indicator

Aforementioned troubles are just for reference. If any failure occurs, please stop using, and inform the professional technicians to check and repair.